Universal Automatic Transfer Switch
Universal Generator Transfer Switch

Installation & Operation Manual

Part # 020-165-B0
Effective: 12/2011

Universal Automatic Transfer Switch

Universal Generator Transfer Switch

member of The alpha Group™

Your Power Solutions Partner

Universal Automatic Transfer Switch
Universal Generator Transfer Switch

NOTE:

Photographs contained in this manual are for illustrative purposes only. These photographs may not match your installation.

NOTE:

Operator is cautioned to review the drawings and illustrations contained in this manual before proceeding. If there are questions regarding the safe operation of this powering system, contact Alpha Technologies or your nearest Alpha representative.

NOTE:

Alpha shall not be held liable for any damage or injury involving its enclosures, power supplies, generators, batteries, or other hardware if used or operated in any manner or subject to any condition inconsistent with its intended purpose, or if installed or operated in an unapproved manner, or improperly maintained.

For technical support, contact Alpha Technologies:

Canada and USA: **1-888-462-7487**
International: **+1-604-436-5547**
Email: **support@alpha.ca**

Copyright

Contents

1. Product Safety Information

IMPORTANT SAFETY INSTRUCTIONS

SAVE THESE INSTRUCTIONS: This manual contains important safety instructions that must be followed during the installation, servicing and maintenance of the product. Keep it in a safe place.

General Warnings and Cautions

WARNING

You must read and understand the following warnings before installing the UATS/UGTS (referred to as Transfer Switch hereafter) and its components. Failure to do so could result in personal injury or death.

- Read and follow all instructions included in this manual.
- Do not work alone under hazardous conditions.
- Only qualified personnel are allowed to install, operate and service the Transfer Switch and its components.
- Observe all applicable national and local electrical codes when installing the Transfer Switch.
- Always assume electrical connections or conductors are live. Turn off all circuit breakers and double-check with a voltmeter before performing installation or maintenance.
- The Transfer Switch does NOT have an on/off switch to de-energize the line output. Whenever it is connected to line or generator power, power is present at the output. Use extreme caution at all times.
- Before installation, verify that the input voltage and current requirements of the load are within the specifications of the Transfer Switch given on page 30.
- The Transfer Switch can be operated to a maximum operating temperature of 74 °C (with derating). See Specifications on page 30 for detailed temperature ratings.
- Keep tools away from walk areas where you or others could fall over them.

- Wear safety glasses when working under any conditions that might be hazardous to your eyes.
- Do not work on the system or connect or disconnect cables during periods of lightning activity.
- Never let water from rain, a hose, tap or a sprinkler's output, road splash or other water sources enter the enclosure of the Transfer Switch to prevent accidental shorts, shocks or electrocutions.

Certifications and Compliances

The Transfer Switch has been designed, manufactured, and tested to the requirements of the following national and international safety standards:

120V version:

- ☑ CSA-C22.2 No. 107.3 – Uninterruptible Power Systems
- ☑ UL 1778 (Edition 4) – Uninterruptible Power Systems

230V version:

- ☑ EN 62040-1-2:2003 – Uninterruptible Power Systems (UPS) - General and Safety Requirements for UPS used in Restricted Access Locations

2. Introduction

What This Manual Covers

This manual provides full procedures for the safe and proper installation, operation, maintenance, and troubleshooting of the Universal Automatic Transfer Switch (UATS) and Universal Generator Transfer Switch (UGTS). In this manual, the term “Transfer Switch” will be used to mean both or either of these two switches.

Who Should Read This Manual

This manual is intended for qualified installers – trained electricians or technicians who are fully educated on the hazards of installing electrical equipment such as uninterruptible power supplies and their associated batteries and accessories. The Product Safety Information chapter and the Operation chapter are intended for anyone who will be operating the Transfer Switch as a non-technical user.

How to Use This Manual

Before you begin installing the Transfer Switch, please ensure that you are familiar with all the warnings and cautions described in this manual (see “Product Safety Information” on page 5). Once you are aware of all the safety issues, then you can start to plan the installation according to “Installation” on page 13. After you have completed the installation, you can start learning how to operate the system to meet the needs of your application.

Symbols Used in This Manual

This section explains the warning, caution and information symbols used in this manual.

WARNING

Warnings draw special attention to anything that could injure or kill you (the operator) or somebody else, and explain how to avoid these situations. They are placed before the step in the procedure to which they apply. Warnings display the “attention” icon, followed by the word “WARNING” (in bold uppercase) highlighted in gray as shown in this example.

Caution

Cautions draw special attention to anything that could damage equipment or cause the loss of data, and provide information on how to avoid these situations. They are placed before the step in the procedure to which they apply. Cautions display the “attention” icon, followed by the word “Caution” in bold title case as shown in this example.

Note

Notes contain information or options you should remember for future use – something that may seem minor or inconsequential but will be important in the future. Notes display the “push pin” icon, followed by the word “Note” in title case as shown in this example.

Symbols Used on The Product

The following symbol appears on various internal components of the Transfer Switch:

Risk of electric shock.

Related Documents

- FXM UPS Operator’s Manual (Doc# 017-201-B0)
- “Local electrical code (e.g. National Electrical Code, or NFPA 70 in the United States, Canadian Electrical Code or CSA C22.1 in Canada)

3. Overview

Introduction

The Universal Automatic Transfer Switch (UATS) and Universal Generator Transfer Switch (UGTS) are the next generation of Automatic Transfer Switch (ATS) and Generator Transfer Switch (GTS) products. They are optional add-on switching units specifically designed for the FXM UPS family (FXM 650, 1100 and 2000) and the Novus Micro UPS family (Micro 300 and 1000). These switching units provide power and/or bypass capacity (automatic or manual) so that the operator may safely disconnect the UPS from line or generator power for easy removal and servicing. In bypass mode, the loads are directly connected to the line or generator power without any conditioning. Depending on the use of one and/or the other, the Transfer Switch allows the use of up to 3 different back-up sources (line, batteries and generator).

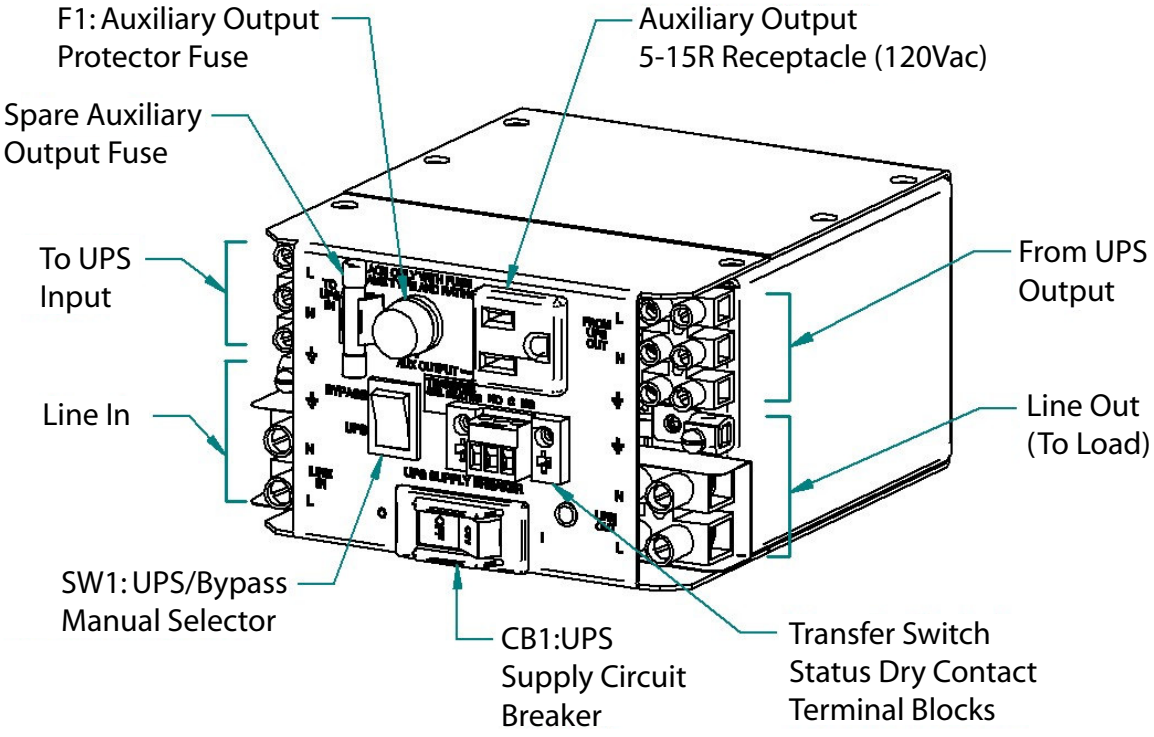

Figure 3.1 – UATS front panel description

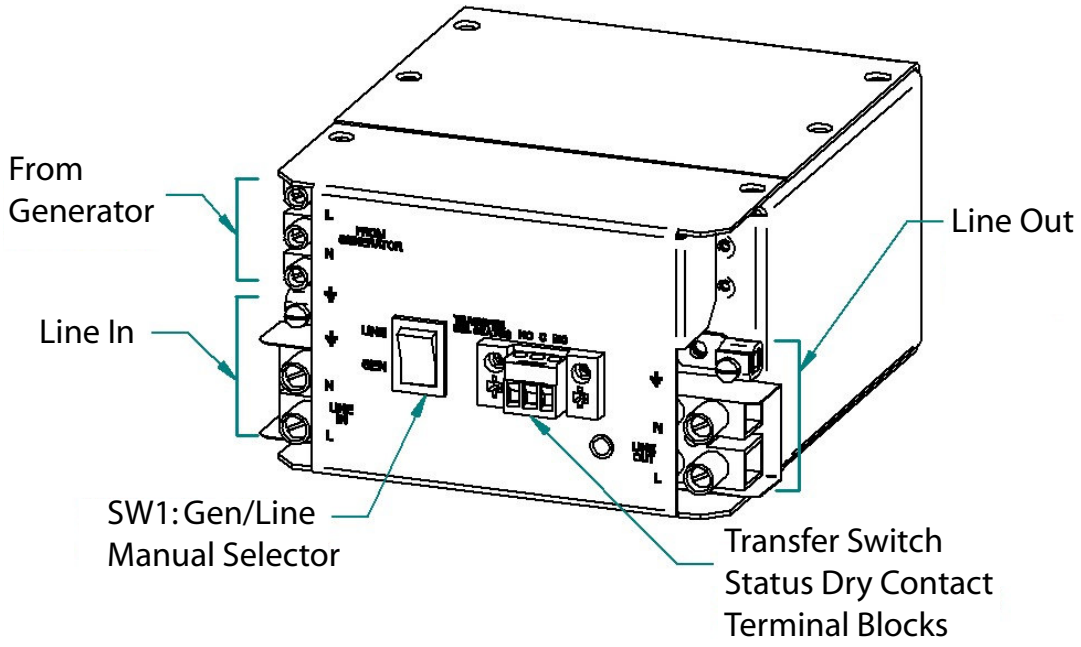

Figure 3.2 – UGTS front panel description

Figure 5.7 shows various configurations of mounting the UATS and UGTS onto the optional 19” Rack Mounting Accessory Shelf. Note that the UATS and/or UGTS can only be mounted in position 2 and/or position 3 as shown.

4. Unpacking the Transfer Switch

Opening the Package

The Transfer Switch is intended to be factory-installed into the enclosure with the 19” Rack Mounting Accessory Shelf. However, it can also be shipped separately with or without being assembled into the shelf.

Checking the Package Contents

Before you begin installation, inspect the package contents for any physical damage and make sure the following standard items as well as purchased options are included. DO NOT install or use a damaged product.

Standard items	
Qty	**Item**
1	UATS
	• 120 V (p/n 020-165-21)
	• 120 V with switch status contacts (p/n 020-165-22)
	• 230 V (p/n 020-165-31)
1	UGTS
	• 120 V (p/n 020-166-21)
	• 120 V with switch status contacts (p/n 020-166-22)
	• 230 V (p/n 020-166-31)
1	Installation Manual (this manual comes with all of the above products)

Options

Available optional items
Accessories that can be used with Transfer Switch only:
Wall Mounting Kit (p/n 740-756-21, see Figure 5.1)
Single Side Rack Mounting Plate (p/n 593-510-R4, see Figure 5.5)
Accessories that can be assembled onto the 19" rack mount rail and interconnect with the Transfer Switch:
19" Rack Mounting Accessory Shelf (p/n 593-509-R4) with the following options: (see Figure 5.7 on page 17 for more information)
• Receptacle plate for multiple battery heating mats: – 2X 5-15R duplex (for 120 V) – 2X 6-15R duplex (for 240 V) – 4X IEC 320 (for 230 V)
• TVSS (p/n 740-755-21 (120V), 740-755-22 (230V)); this Transient Voltage Surge Suppresor is intended to be installed before the AC Line input of the Transfer Switch. See Figure 5.7 for mounting configurations.
• Manual Transfer Switch (MTS) connection plate for use when manual generator transfer switch is remotely mounted. (p/n 740-773-21)
• Adaptor plate for 23" rack (p/n 593-411-R4)

5. Installation

WARNING

Grounding: The Transfer Switch MUST be correctly grounded for proper operation.

WARNING

Disconnects: The utility line connecting to the UATS, UGTS and FXM UPS Module must be protected by a circuit breaker certified for this use in accordance with the local electrical code. The size of the circuit protection is based on the maximum input AC current. Refer to the product nameplate or Specification section of this manual for input current information.

Tools and Equipment Required for Installation

- Slot head screwdriver to fit the terminal blocks
- Minimum #10 AWG copper wire for input/output terminal blocks

Mounting the Transfer Switch

The Transfer Switch can be mounted (1) as a stand alone unit, (2) to a chassis with optional Wall Mounting Kit (e.g. on the external bottom enclosure of the Novus Micro UPS) or (3) to an equipment rack with Rack Mount Accessory Shelf (e.g. inside the end system enclosure of the FXM UPS). The following diagrams illustrate some of the possible configurations.

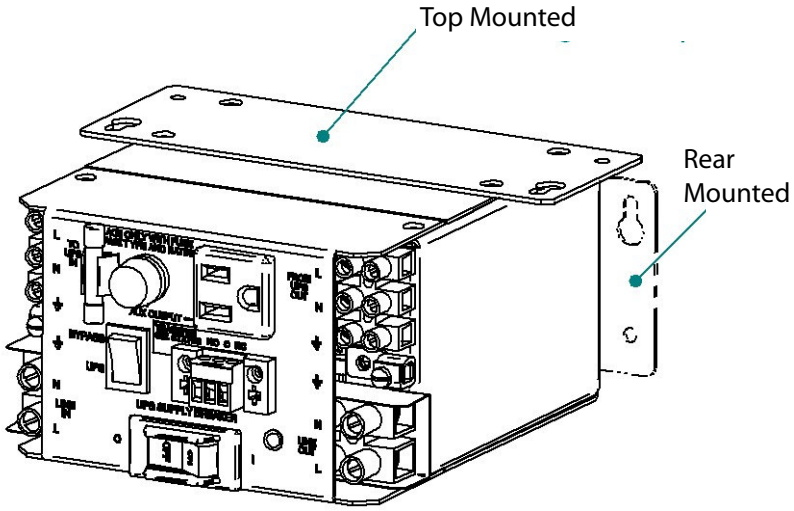

Figure 5.1 – UATS with optional Wall Mounting Kit (top or rear mounted)

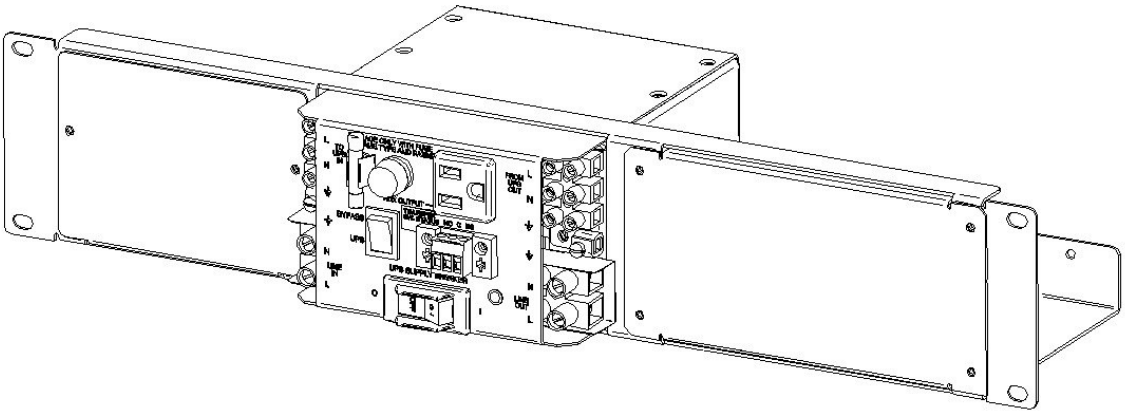

Figure 5.2 – UATS in 19” Rack Mount Accessory Shelf

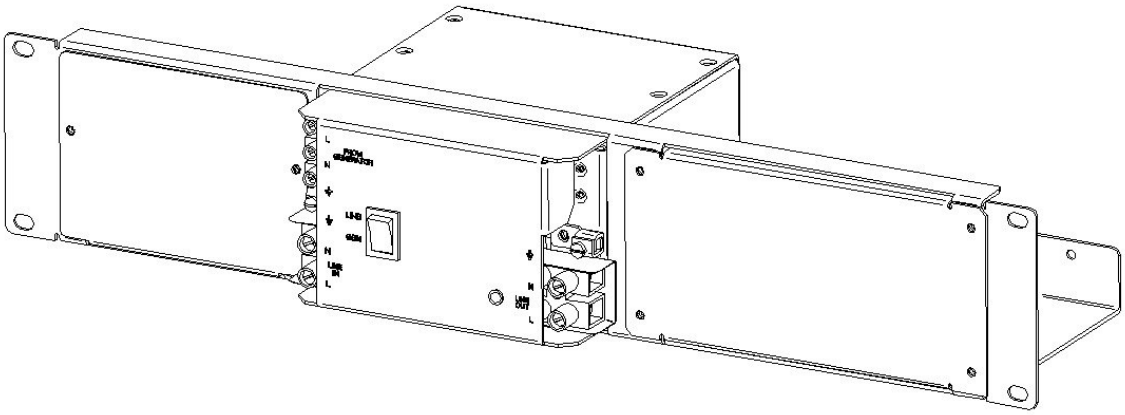

Figure 5.3 – UGTS in 19” Rack Mount Accessory Shelf

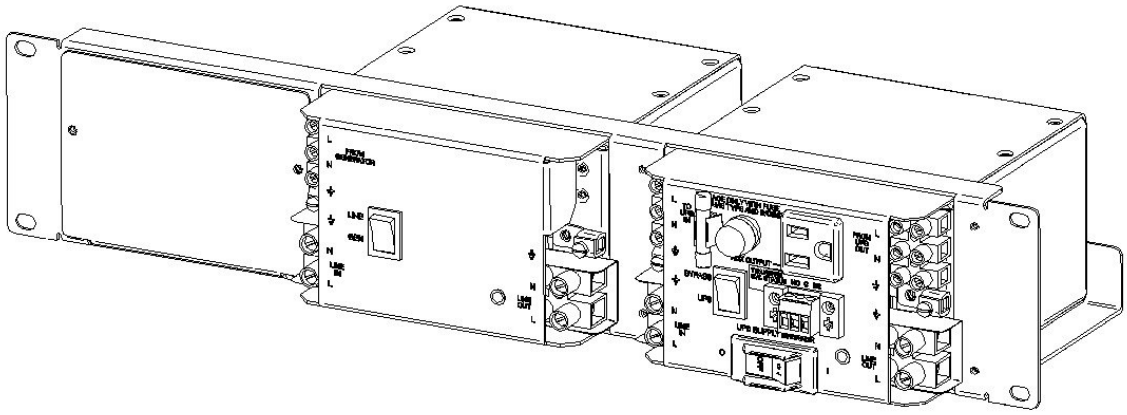

Figure 5.4– UGTS and UATS in 19” Rack Mount Accessory Shelf

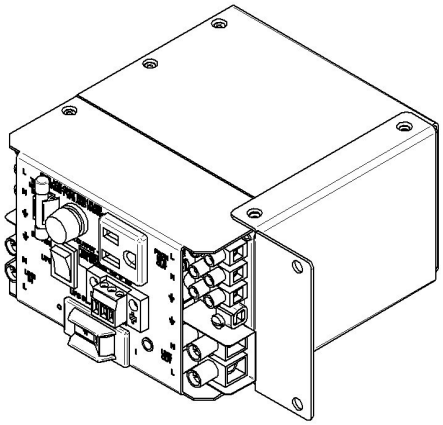

Figure 5.5– UATS with Single Side Rack Mount Bracket

Wiring the Transfer Switch

WARNING

Use copper conductors only.

The Transfer Switch should be wired to the UPS as shown in Figure 5.6 below. Refer to Figure 5.9 for terminal block torque values and wire strip lengths.

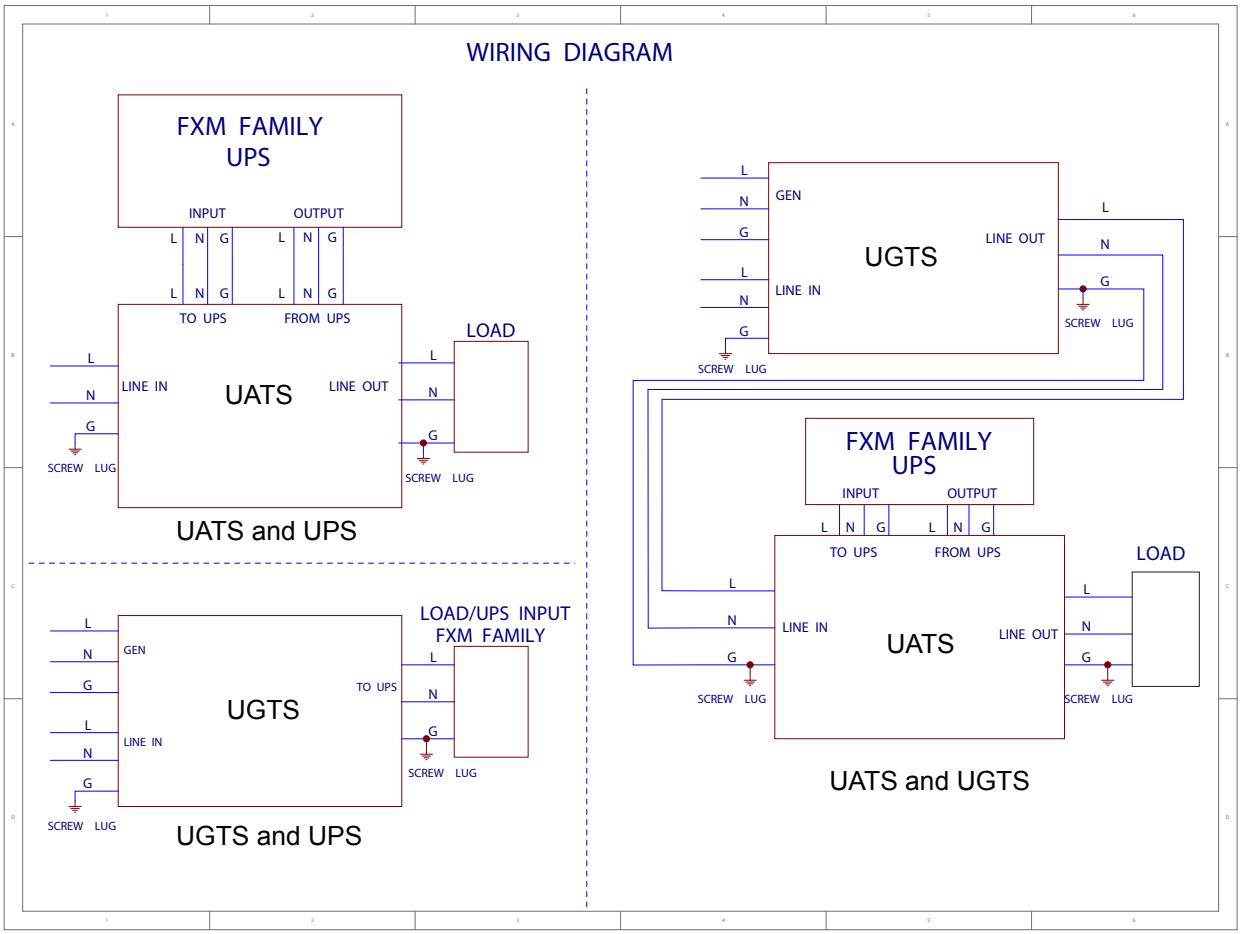

Figure 5.6 – Wiring the UATS and UGTS to the UPS

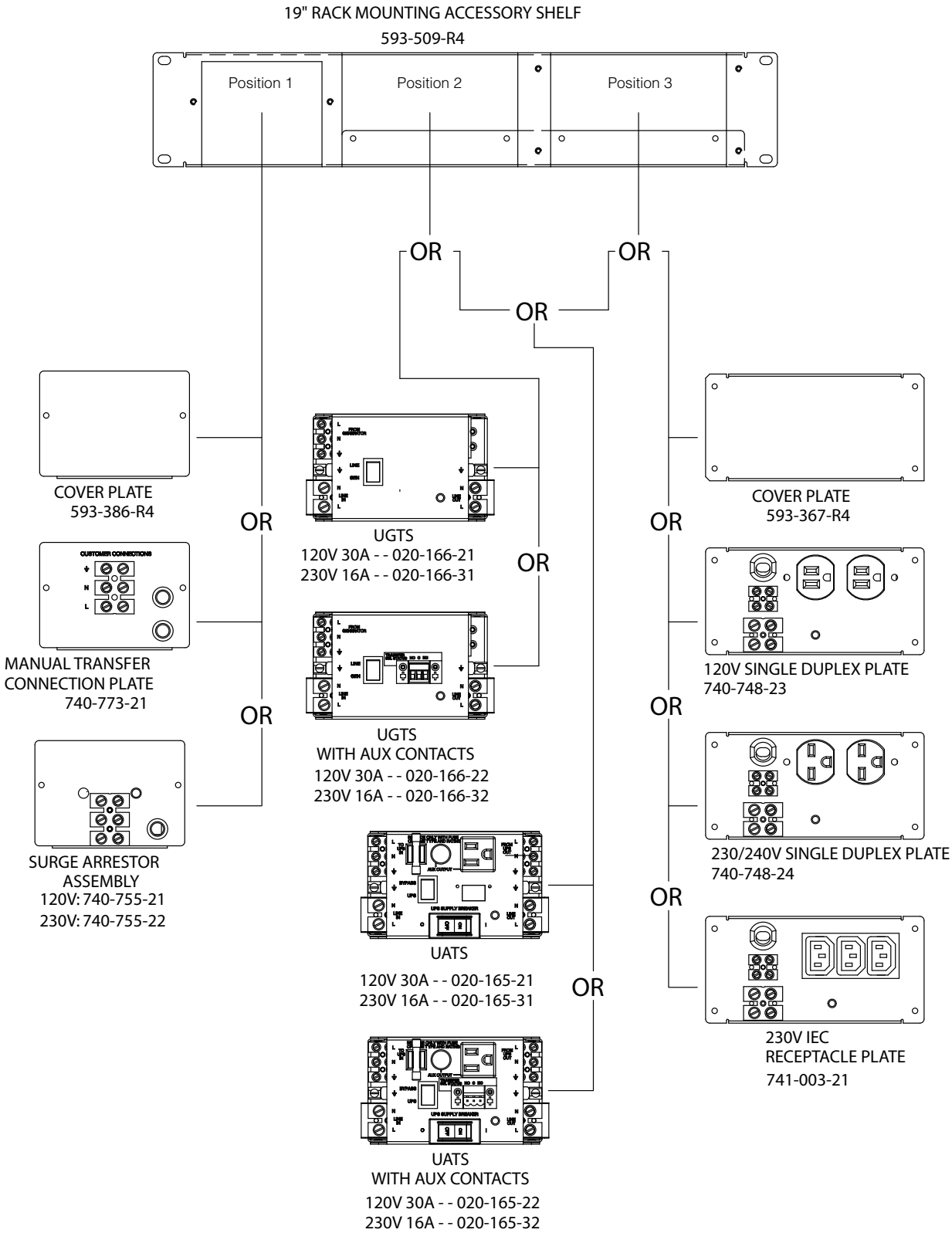

Figure 5.7 – Rack mounting Accessory Shelf - possible combinations

Alpha P/N	Description	Position 1	Position 2	Position 3
020-168-21	Acsy Shlf w/UATS,UGTS & Surge,120V	740-755-21 TVSS Assy 120V	020-166-21 UGTS 120V	020-165-21 UATS 120V
020-168-22	Acsy Shlf w/UATS,UGTS & Surge,230V	740-755-22 TVSS Assy 230V	020-166-31 UGTS 230V	020-165-31 UATS 230V
020-168-23	Acsy Shlf w/UATS & UGTS,120V	593-386-R4 Blank Cvr Plate	020-166-21 UGTS 120V	020-165-21 UATS 120V
020-168-24	Acsy Shlf w/UATS & UGTS,230V	593-386-R4 Blank Cvr Plate	020-166-31 UGTS 230V	020-165-31 UATS 230V
020-168-25	Acsy Shlf w/UATS,Surge & RPA,120V	740-755-21 TVSS Assy 120V	020-165-21 UATS 120V	740-748-23 RPA 120V 15A
020-168-26	Acsy Shlf w/UATS,Srg & RPA,230V	740-755-22 TVSS Assy 230V	020-165-31 UATS 230V	740-748-24 RPA 230/240V 15A
020-168-27	Acsy Shlf w/UATS & RPA,120V	593-386-R4 Blank Cvr Plate	020-165-21 UATS 120V	740-748-23 RPA 120V 15A
020-168-28	Acsy Shlf w/UATS & RPA,230V	593-386-R4 Blank Cvr Plate	020-165-31 UATS 230V	740-748-24 RPA 230/240V 15A
020-168-29	Acsy Shlf w/UATS,Surge & Filler Pl,120V	740-755-21 TVSS Assy 120V	020-165-21 UATS 120V	593-367-R4 Cvr Pl, RM Pnl
020-168-30	Acsy Shlf w/UATS,Surge & Filler Pl,230V	740-755-22 TVSS Assy 230V	020-165-31 UATS 230V	593-367-R4 Cvr Pl, RM Pnl
020-168-31	Acsy Shlf w/UATS & Filler Pl,120V	593-386-R4 Blank Cvr Plate	020-165-21 UATS 120V	593-367-R4 Cvr Pl, RM Pnl
020-168-32	Acsy Shlf w/UATS & Filler Pl,230V	593-386-R4 Blank Cvr Plate	020-165-31 UATS 230V	593-367-R4 Cvr Pl, RM Pnl
020-168-33	Acsy Shlf w/UGTS,Surge & Filler Pl,120V	740-755-21 TVSS Assy 120V	020-166-21 UGTS 120V	593-367-R4 Cvr Pl, RM Pnl
020-168-34	Acsy Shlf w/UGTS,Surge & Filler Pl,230V	740-755-22 TVSS Assy 230V	020-166-31 UGTS 230V	593-367-R4 Cvr Pl, RM Pnl
020-168-35	Acsy Shlf w/UGTS & Filler Pl,120V	593-386-R4 Blank Cvr Plate	020-166-21 UGTS 120V	593-367-R4 Cvr Pl, RM Pnl
020-168-36	Acsy Shlf w/UGTS & Filler Pl,230V	593-386-R4 Blank Cvr Plate	020-166-31 UGTS 230V	593-367-R4 Cvr Pl, RM Pnl
020-168-37	Acsy Shlf w/UATS,e/w 2x65A TBs&250mA Fu	741-001-21 Pl,Cust Conn,w/ Fu&TB	020-165-21 UATS 120V	741-002-21 Pl,O/P,UATS/UGTS
020-168-38	Acsy Shlf w/UATS,w/23in Brkts	593-386-R4 Blank Cvr Plate	020-165-21 UATS 120V	593-367-R4 Cvr Pl, RM Pnl
020-168-39	Acsy Shlf w/UATS,Rcptcl Pl & Fltr Mtg Pl	593-452-R4 Pl,Fltr Mtg,ATS/ GTS	020-165-21 UATS 120V	740-748-21 RPA,Mtg,120V,5A, ATS/MBP
020-168-41	Acsy Shlf w/UATS w/MTS Conn Pl,RPA 120V	740-773-21 Pl Assy,MTS	020-165-21 UATS 120V	740-748-23 RPA 120V 15A

Figure 5.8 – Standard Combination Part Numbers for 19” Rack Mounting Accessory Shelf

Alpha P/N	Description	Position 1	Position 2	Position 3
020-168-42	Acsy Shlf w/UATSw/MTS ConnPl&FlrPl,120V	740-773-21 Pl Assy,MTS	020-165-21 UATS 120V	593-367-R4 Cvr Pl, RM Pnl
020-168-45	Acsy Shlf w/UATS & IEC Rcpt Pl	593-386-R4 Blank Cvr Plate	020-165-21 UATS 230V	741-003-21 RPA,230V IEC
020-168-46	Acsy Shlf w/UATSw/MTS ConnPl&FlrPl,230V	740-773-21 Pl Assy,MTS	020-165-31 UATS 230V	593-367-R4 Cvr Pl, RM Pnl
020-168-47	Acsy Shlf w/UATS,w/23in Brkts,230VAC	593-386-R4 Blank Cvr Plate	020-165-31 UATS 230V	593-367-R4 Cvr Pl, RM Pnl
020-168-48	Acsy Shlf,w/UATS e/w 65A TBs	593-386-R4 Blank Cvr Plate	020-165-21 UATS 120V	741-002-21 Pl,O/P,UATS/UGTS
020-168-49	Acsy Shlf,w/UATS,w/ AuxContacts&UGTS,120V	593-386-R4 Blank Cvr Plate	020-166-21 UGTS 120V	020-165-22 UATS,120V,30A
020-168-50	Acsy Shlf w/UATS&GTSw/ AuxContacts,120V	593-386-R4 Blank Cvr Plate	020-166-22 UGTS,120V,30A	020-165-22 UATS,120V,30A
020-168-51	Acsy Shlf w/UATS,Rcptcl Pl & LVD	240-827-21 LVD Assy	020-165-21 UATS 120V	740-748-23 RPA 120V 15A
020-168-52	Acsy Shlf w/UATS,2xAux TB & FuHldr,120V	593-386-R4 Blank Cvr Plate	020-165-21 UATS 120V	593-367-R4 Cvr Pl, RM Pnl
020-168-53	Acsy Shlf w/Surge,3x10A CBTBD,230V	593-386-R4 Blank Cvr Plate	740-755-22 TVSS Assy 230V	593-367-R4 Cvr Pl, RM Pnl
020-168-54	Acsy Shlf,w/UATS,MTS ConnPlate,RPA, 230V	740-773-21 Pl Assy,MTS	020-165-31 UATS 230V	740-748-24 RPA 230/240V 15A
020-168-55	Acsy Shlf w/UATSw/MTS ConnPlate&FillerPlate,120V	740-773-21 Plate Assy,MTS	020-165-21 UATS 120V	593-367-R4 Cvr Plate, RM Panel

Note

Other configurations may be possible, consult your Alpha representative.

Wiring the Rack Mount Accessory Shelf

WARNING

All electrical wiring must be performed by a qualified electrician or trained personnel.

The Rack Mount Accessory Shelf is shipped with the accessories pre-wired in Position 1, Position 2 and Position 3 where applicable. See Figure 5.7 and 5.8 for standard configurations. If the Rack Mount Accessory Shelf is pre-installed in an end system enclosure, any wiring to the enclosure accessories, if possible, will also be pre-wired. Figures 5.10 to 5.12 illustrates the field wiring connections for the Surge Arrestor Plate, Manual Transfer Connection Plate and the Receptacle Plates.

Wire Connection Locations				Terminal Type	Torque to maximum	Wire Strip Length	Copper Conductor Size Range
UATS	UGTS	Accessory Shelf Plates					
		Manual Transfer Connection & Surge Arrestor Plates	Output & Receptacle Plates				
To UPS Input	From Generator		Lamp	11.5 mm Spacing	7 lb-in (0.8 N-m)	0.28 in (7 mm)	#22 - #10 AWG (0.33 - 5.26 mm^2)
From UPS Output							
Line In	Line In	Line In	Line Out	14.5 mm Spacing	16 lb-in (2 N-m)	0.35 in (9 mm)	#14 - #6 AWG (2.0 - 13 mm^2)
Line Out	Line Out						
Line In/Out	Line In/Out			Grounding Screw Lug	25 lb-in (2.8 N-m)	0.35 in (9 mm)	#14 - #6 AWG (2 - 13 mm^2)
Transfer Switch Status Dry Contact	Transfer Switch Status Dry Contact			5 mm Spacing	5 lb-in (0.6 N-m)	0.28 in (7 mm)	#26 - #12 AWG (0.13 - 3.3 mm^2)

Figure 5.9 – Terminal Block Torque Values and Wire Strip Lengths

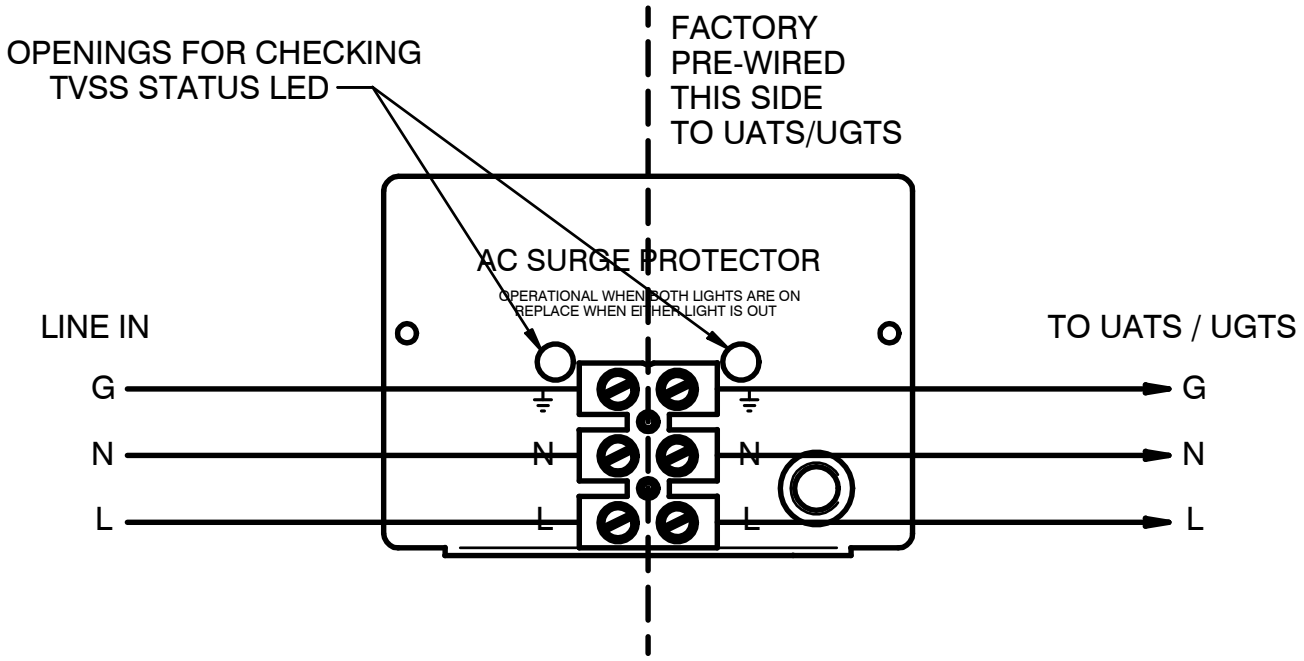

Figure 5.10 – Wiring the Surge Arrestor Plate

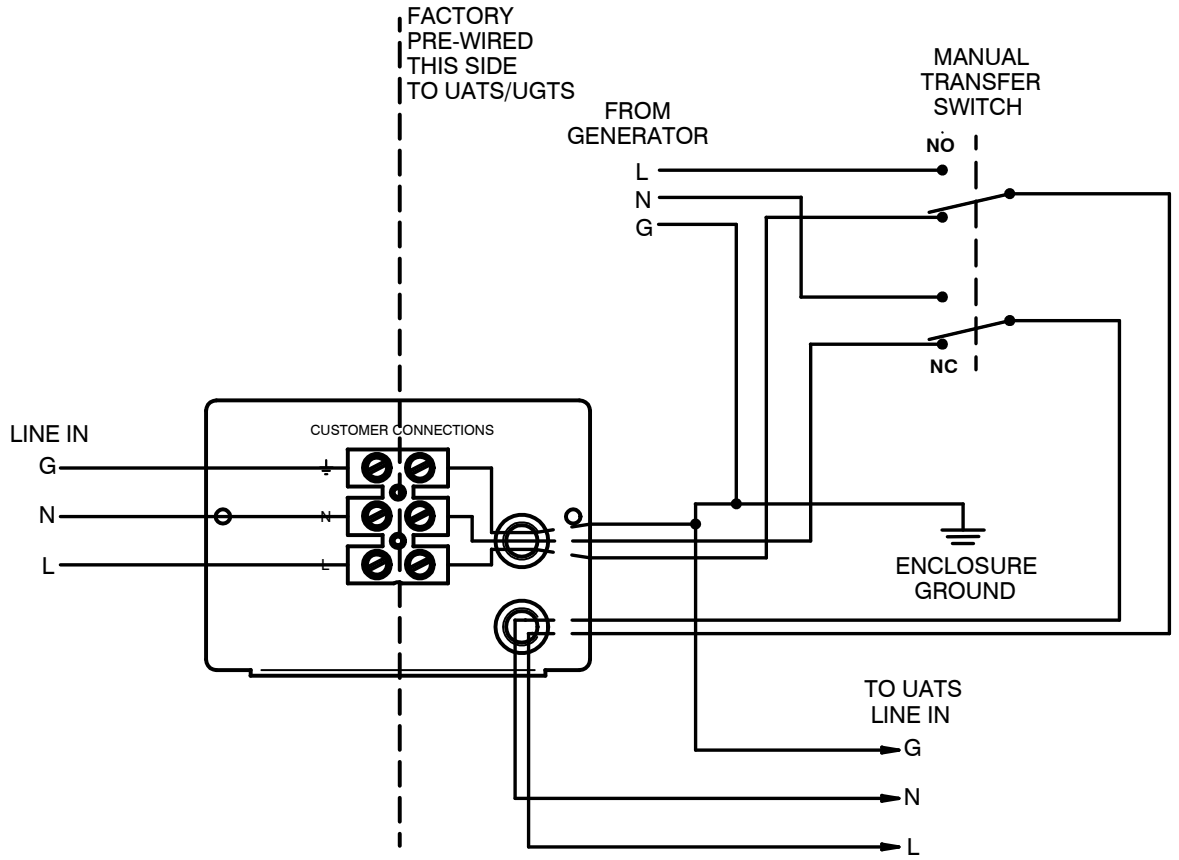

Figure 5.11 – Wiring the Manual Transfer Plate

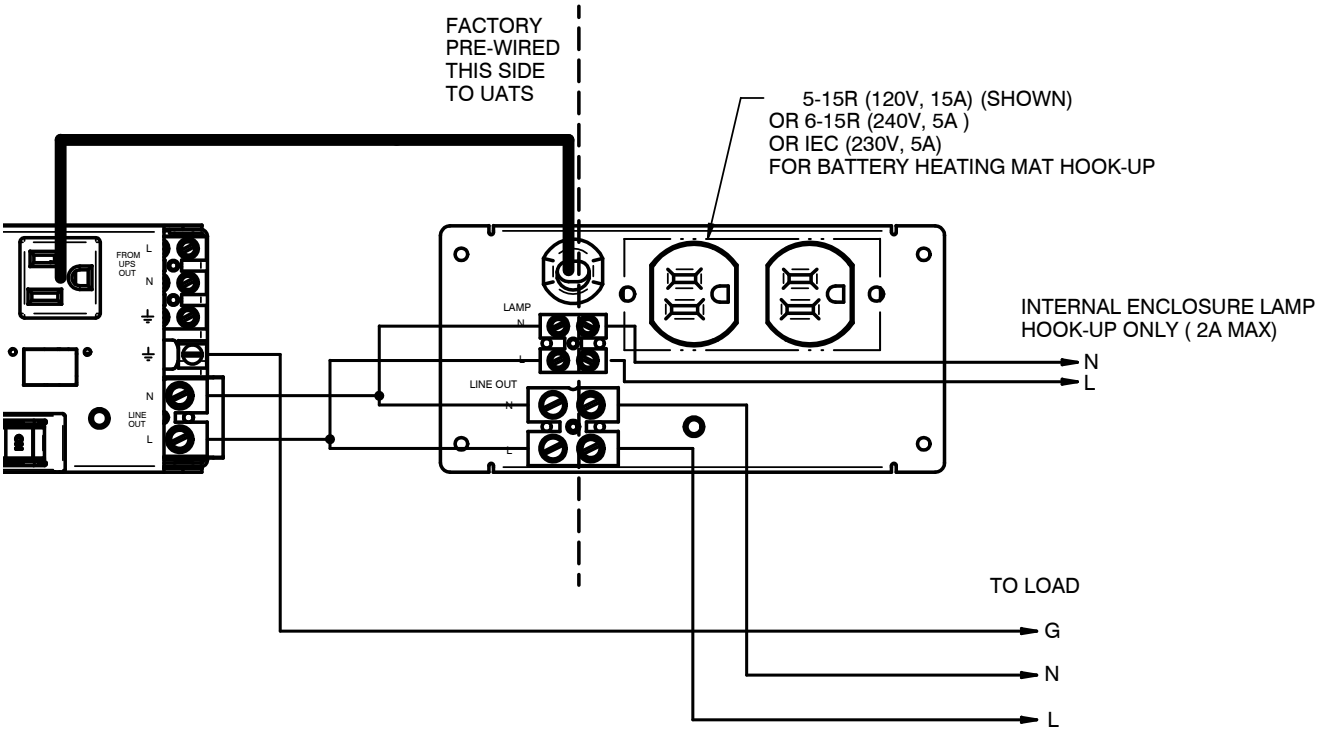

Figure 5.12 – Wiring the Receptacle Plates

6. Operation

Transfer Switch operation and schematics

This section describes the operation of the UATS only. Specific information related to the UGTS is also covered. Figure 6.1 shows the power paths during the normal UPS mode of operation. In this mode, power flows from the utility Line In through CB1 (closed) to the UPS In, through the UPS module and back via "From UPS Out". With SW1 closed (UPS), the relay coil is energized and power from the UPS is routed to "Line Out". The output power is monitored and conditioned by the UPS.

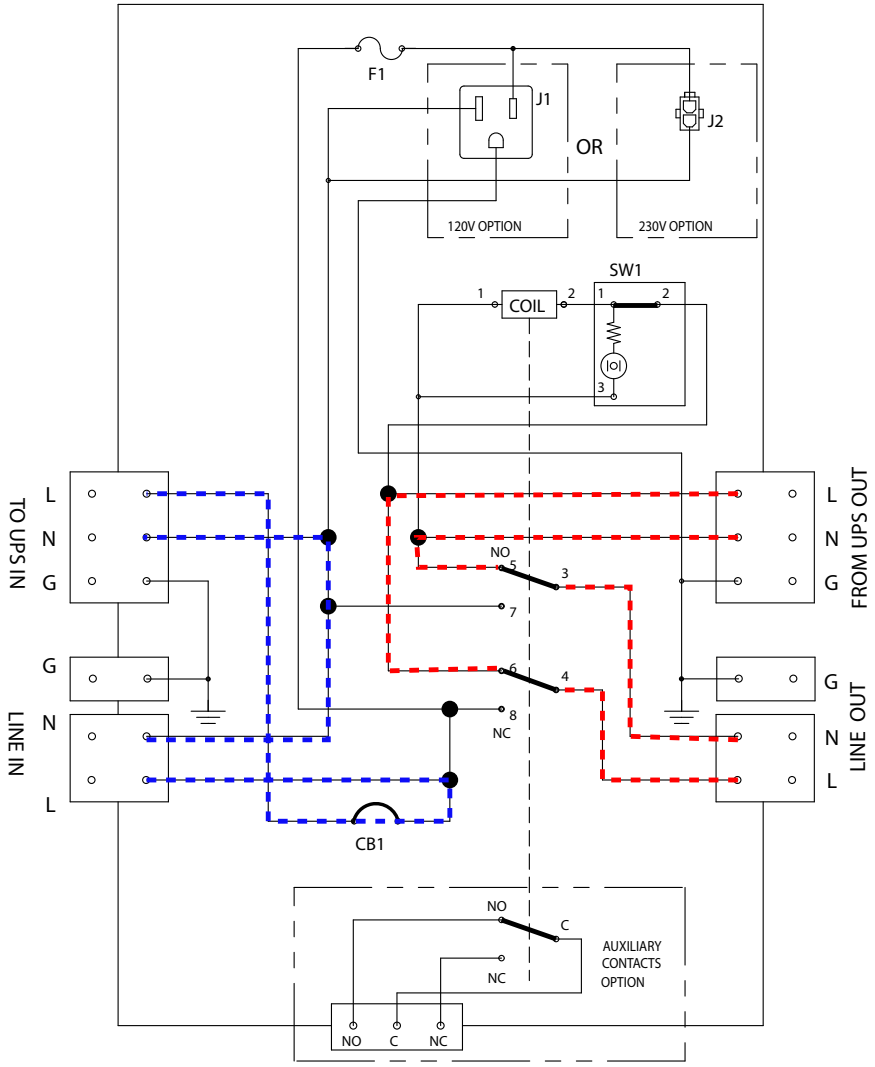

Figure 6.1– UATS Operating in UPS mode
(SW1=Closed, CB1=Closed)

Figure 6.2 shows the power paths in the Bypass mode of the UATS.

WARNING

The UPS is still energized and AC power is present at its output.

In this mode, power flows from the utility (Line In) through CB1 (closed) to the UPS In, through the UPS module and back via "From UPS Out". However with SW1 opened (Bypass), the relay coil is not energized and utility power is routed to "Line Out". The UPS is therefore bypassed and the output power follows the utility input from Line In, which is neither monitored nor conditioned. Any fluctuations in the Line In power will be directly transmitted to the Line Out output.

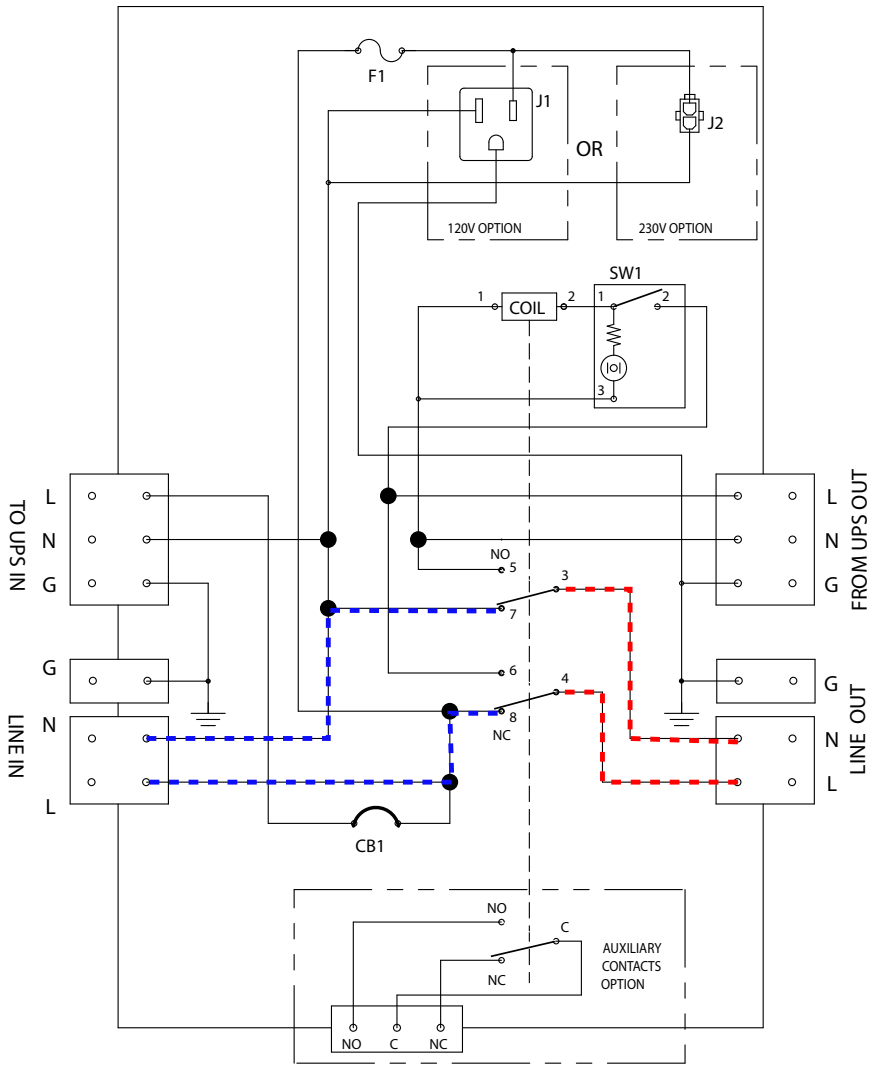

Figure 6.2– UATS Operating in Bypass mode
(SW1=Opened, CB1=Closed)

Figure 6.3 shows the power paths in the Bypass - Service mode of the UATS. In this mode, power flows directly from the utility (Line In) to the Line Out. With CB1 opened (Service), no power appears at the AC input of the UPS, which makes it safe for the service personel to disconnect the AC input wiring and remove the UPS for servicing.

WARNING

The UPS must be powered off and disconnected from the batteries before removing it from service. Refer to the UPS Operator's Manual.

In the Bypass mode, the output power is neither monitored nor conditioned. Any fluctuations in the Line In power will be directly transmitted to the Line Out output.

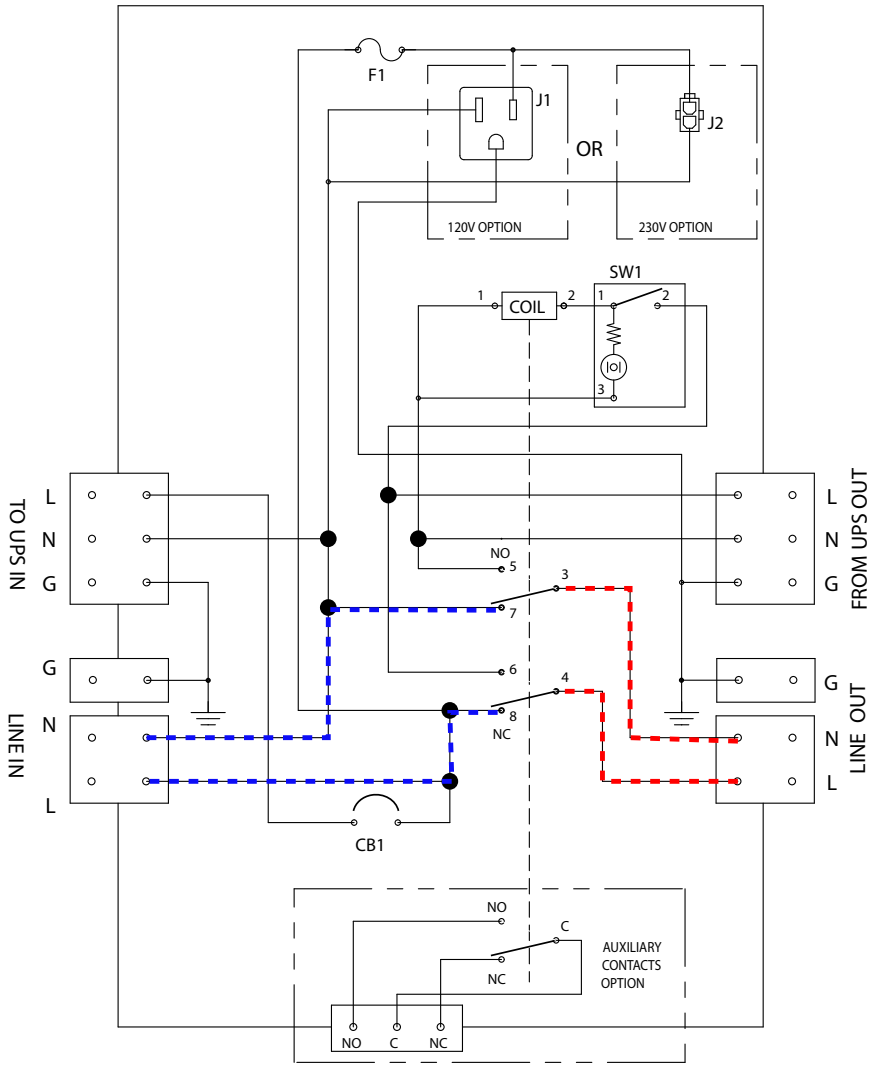

Figure 6.3 – UATS Operating in Bypass - Service mode (SW1=Opened, CB1=Opened)

Figure 6.4 shows the power paths in the Inverter mode of the UATS. In this mode, there is no AC power supply to the UPS AC input (CB1=Opened). The output power is derived solely from the UPS operating in inverter (backup) mode. Alpha does not recommend this mode for providing backup power to critical loads because the UPS will shut down as soon as backup battery string voltage falls out of specification.

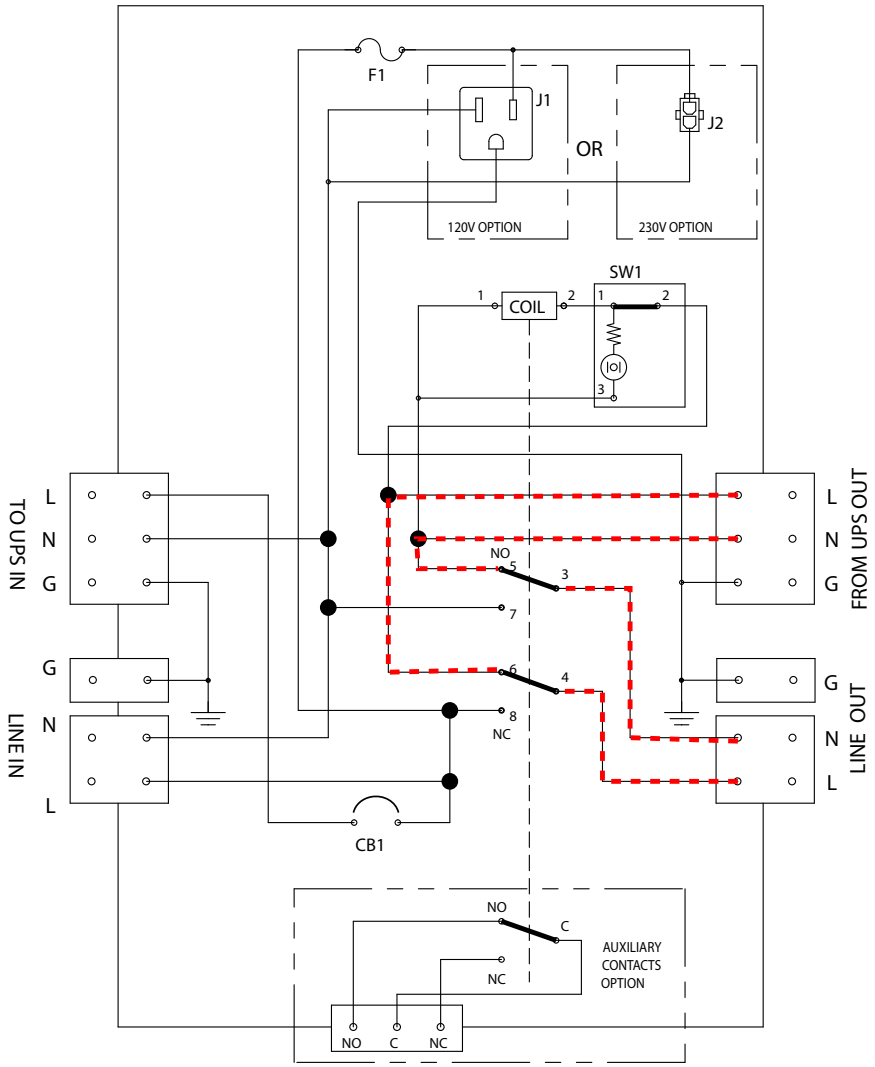

Figure 6.4 – UATS Operating in Inverter mode
(SW1=Closed, CB1=Opened)

Table 6.1 below summarizes the operating modes of the UATS.

SW1	CB1	Operating Mode
Closed	Closed	UPS
Opened	Closed	Bypass
Opened	Opened	Bypass - Service
Closed	Opened	Inverter*

*UPS inverter is supplying power (not recommended)

Table 6.1 – UATS operating modes

The operating modes of the UGTS are depicted in Figure 6.5 and Table 6.2 below.

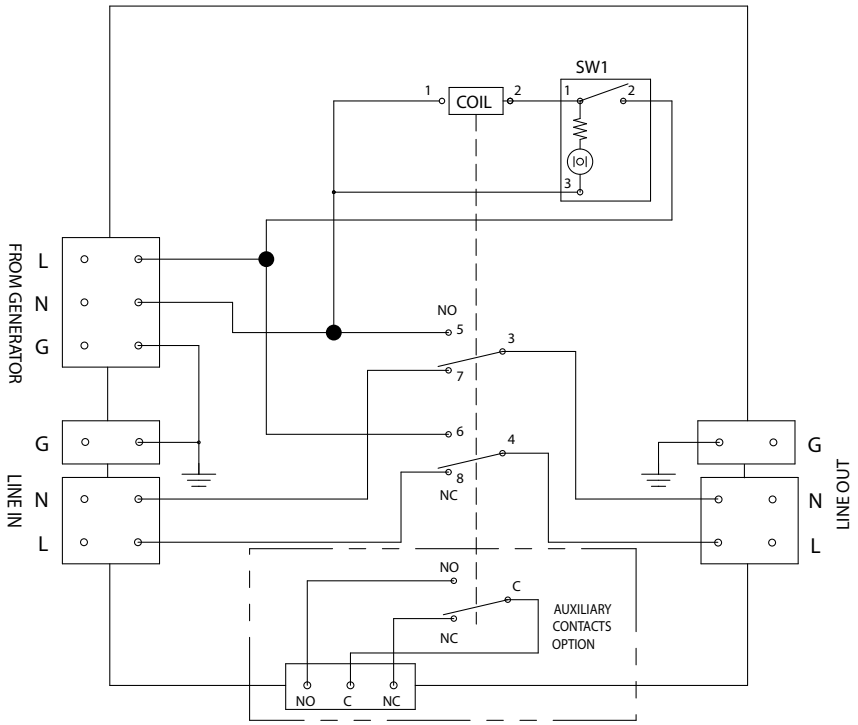

Figure 6.5– UGTS Schematic

SW1	Operating Mode
Closed (Gen)	Automatic Generator Transfer is enabled
Open (Line)	Generator Transfer is disabled

Table 6.2 – UGTS operating modes

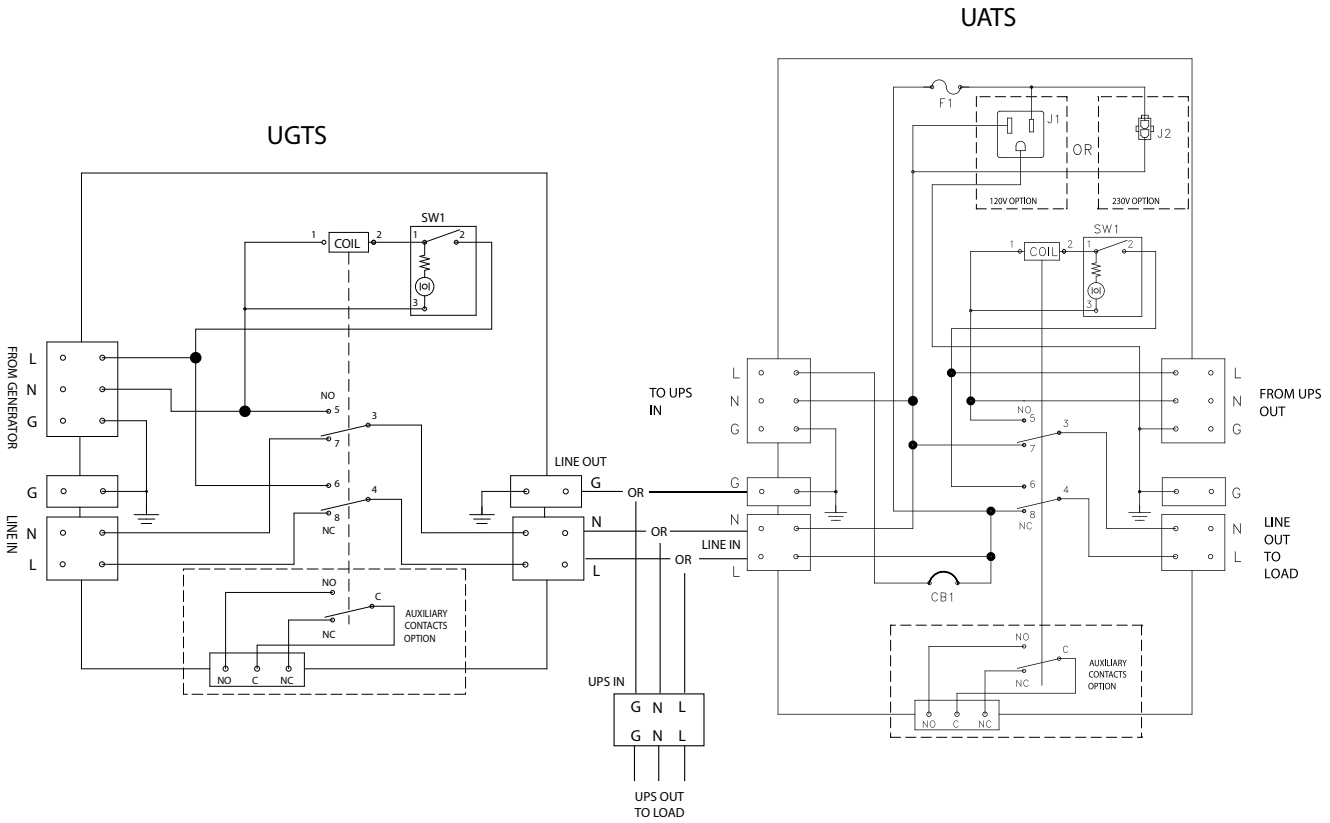

Figure 6.6 – UGTS wiring diagram with OR without UATS

WARNING

When servicing the UPS:

- If UATS is used: Switch SW1 to Bypass, turn off CB1, and battery CB of the UPS.
- If only UGTS is used (UPS connected to Line Out): The main source branch CB protection coming either from both Generator and Line must be turned off. Likewise, battery CB of the UPS must be turned off.

Caution

The NEMA 5-15R simplex AC output receptacle is rated for 120 VAC, 15 A. For the 230 VAC model, the Mini-Mate-N-Connector AC output is protected by a 5 A fuse.

7. Maintenance

Preventative Maintenance

Preventative maintenance should be performed on the Transfer Switch module together with the UPS module or system every 6 to 12 months. For mission critical applications, more frequent maintenance should be planned. Proper implementation of the following procedure will insure that your system continues to provide reliable backup power in the event of a utility power failure.

Alpha can offer this service if you prefer. Contact your Alpha representative for details and pricing or see Service and Technical Support below.

Tools and Materials Required

- Slot head screw driver to fit the terminal blocks
- AC voltmeter

WARNING

Always assume electrical connections or conductors are live. Turn off all circuit breakers and double-check with a voltmeter before performing installation or maintenance. Make sure that you have read and understood the “Product Safety Information” chapter on page 5 before performing the following procedure.

Procedure

1. Inspect the Transfer Switch and wiring for any physical damage. Repair or replace as required.
2. Verify that all connections are securely fastened. Tighten if necessary.
3. Verify 120 Vac output from the 5-15R receptacle.

Service and Technical Support

Alpha Technologies is committed to the support of Alpha products throughout their life. Alpha provides a full range of service products including extended warranties, on-site service plans and battery renewal programs. Parts, supplies and replacement or upgraded battery packs are also available. To discuss any of your after-sales needs, in US/Canada, please call toll-free 1-800-667-8743 and ask for Service.

8. Troubleshooting

The following table contains a list of possible problems you may encounter.

Symptom	Description of Problem	What To Do
No output from 5-15R receptacle (120 V model)	Fuse is opened.	Replace the fuse with the provided 15 A fuse (type: ferrule fuse 1/4” x 1-1/4”, 15 A, 250 V, slow blow, p/n 460-043-10)
No output from Mini-Mate -N-Lock Connector (230 V model)	Fuse is opened.	Replace the fuse with the provided 5 A fuse (type: ferrule fuse 1/4” x 1-1/4”, 5 A, 250 V, slow blow, p/n 460-025-10)

Appendix A: Specifications

Due to ongoing product improvements, specifications are subject to change without notice.

UATS/UGTS – Mechanical Specifications	
Dimensions, in (mm) **H x W x D**	3.25 x 5.3 x 6.0 (82 x 135 x 152)
Weight, lb (kg)	3.5 (1.6)
Material	Powder coated electro galvanized steel
Color	Satin black
Mounting options	Stand alone, chassis mount (with mounting plate), single-side rack mount or equipment rack mount (with 19" rack mount accessory shelf)
I/O Connections	
UATS	
Line In	Terminal blocks #14 to #6 AWG (2.08 to 13.3 mm^2)
Line Out	Terminal blocks #14 to #6 AWG (2.08 to 13.3 mm^2)
From UPS Output	Terminal blocks #22 to #10 AWG (0.33 to 5.26 mm^2)
To UPS Input	Terminal blocks #22 to #10 AWG (0.33 to 5.26 mm^2)
Auxiliary AC Output	NEMA 5-15R receptacle (120V version) Mini-Mate-N-Lock Connector (230V version)
Transfer Switch Status Dry Contact	3-position plug-in terminal blocks accept #24 to #12 AWG (0.20 to 3.3 mm^2)
UGTS	
Line In	Terminal blocks #14 to #6 AWG (2.08 to 13.3 mm^2)
Line Out	Terminal blocks #14 to #6 AWG (2.08 to 13.3 mm^2)
Generator In	Terminal blocks #22 to #10 AWG (0.33 to 5.26 mm^2)
Transfer Switch Status Dry Contact	3-position plug-in terminal blocks accept #24 to #12 AWG (0.20 to 3.3 mm^2)
Humidity	
Operating (non-condensing)	Up to 95% (RH)
Storage	Up to 95% (RH)
Temperature Range, °C	
Operating	–40 to 55 (Full load) 56 to 74 (Derated load[1])
Storage (non-operating)	–40 to 75

Notes:
1. Capable of operating at 73% of rated full load for up to 2 hours at 74°C. Above 55°C ambient, derate output power by 1.4% per °C rise, up to 74°C max.; For application using FXM2000-120V UPS module only: above 50°C ambient, derate output power by 1.1% per °C rise, up to 74°C max.

UATS/UGTS – Electrical Specifications	
Input	
Voltage (nominal), VAC	120 or 230
Frequency, Hz, ±5%	50/60
Current, Amps (max)	30/16 @120/230VAC
Power, VA	3600
Output	
Voltage (nominal), VAC	per UPS, Line or Generator
Frequency, Hz, ±5%	50/60
Power, W/VA	3600
Minimum Voltage for Auto Transfer	85% of nominal Voltage
Transfer and re-transfer time switching between Bypass and UPS (UATS) or Line and Generator (UGTS)	40 ms
Transfer switch status dry contact rating	3 A, 48 VDC
For UATS Only:	
Supplementary protector for UPS (CB1)	30 A (120 Vac) 20 A (230 Vac)
Branch protector for auxiliary output (F1 fuse, ferrule type 1/4" x 1-1/4", 250 V slow blow)	15 A (120 Vac) 5 A (230 Vac)
Regulatory	
Electrical Safety	CSA C22.2 No.107.3–05, UL 1778
	CE (for 230V version)

WARRANTY

Alpha Technologies Ltd. warrants all equipment manufactured by it to be free from defects in parts and labor, for a period of two years from the date of shipment from the factory. The warranty provides for repairing, replacing or issuing credit (at Alpha's discretion) for any equipment manufactured by it and returned by the customer to the factory or other authorized location during the warranty period. There are limitations to this warranty coverage. The warranty does not provide to the customer or other parties any remedies other than the above. It does not provide coverage for any loss of profits, loss of use, costs for removal or installation of defective equipment, damages or consequential damages based upon equipment failure during or after the warranty period. No other obligations are expressed or implied. Warranty also does not cover damage or equipment failure due to cause(s) external to the unit including, but not limited to, environmental conditions, water damage, power surges or any other external influence.

The customer is responsible for all shipping and handling charges. Where products are covered under warranty Alpha will pay the cost of shipping the repaired or replacement unit back to the customer.

Emergency Shutdown Procedure

In an emergency, Line power may be disconnected at the service entrance or main electrical panel to protect emergency personnel, but there can still be AC power present at the UPS output. You must always turn OFF the battery circuit breaker.

1. **Turn OFF the Battery Circuit Breaker of the UPS.**
2. **Turn OFF the Generator (if connected).**
3. **Turn OFF the Input Circuit Breaker of the UPS.**
4. **Disconnect the AC Input power to the UPS.**
5. **Disconnect the battery string from the UPS.**

For emergency technical support 7 days a week/24 hours a day, call:

Canada/USA: Toll Free 1-800-667-8743

Direct: 604-430-1476

Complete the following for your records:

Serial # _____

Options_____

Purchase Date _____

This unit was purchased from:

Dealer_____

City_____

State/Province_____

Zip/Postal Code_____

Country _____

Telephone # _____

Fax # _____

E Mail Address _____

Alpha Technologies Ltd.
7700 Riverfront Gate
Burnaby, BC V5J 5M4
Canada
Tel: +1 604 436 5900
Fax: +1 604 436 1233
Toll Free: +1 800 667 8743

Alpha Energy
1628 W Williams Drive
Phoenix, AZ 85027
United States
Tel: +1 602 997 1007
Fax: +1 623 249 7833

Alpha Technologies Europe Ltd.
Twyford House Thorley
Bishop's Stortford
Hertfordshire, CM22 7PA
United Kingdom
Tel: +44 1279 501110
Fax: +44 1279 659870

Alpha Technologies
Unit 504, 5/F,
Fourseas Building
No 208-212 Nathan Road
Kowloon, Hong Kong
Tel: +852 2736 8663
Fax: +852 2199 7988

Alpha Technologies Inc.
3767 Alpha Way
Bellingham, WA 98226
United States
Tel: +1 360 647 2360
Fax: +1 360 671 4936

Alpha Technologies GmbH
Hansastrasse 8
D-91126
Schwabach, Germany
Tel: +49 9122 79889 0
Fax: +49 9122 79889 21

Alphatec Ltd.
339 St. Andrews St.
Suite 101 Andrea Chambers
P.O. Box 56468
3307 Limassol, Cyprus
Tel: +357 25 375 675
Fax: +357 25 359 595

Alpha Innovations Brasil
Rua Manuel Augusto
de Alvarenga, 155
São Paulo, SP - Brasil
Tel: +55 11 2476 0150
Fax: +55 11 2476 0150

Alpha Industrial Power Inc.
1075 Satellite Blvd NW,
Suite 400
Suwanee, GA 30024
United States
Tel: +1 678 475 3995
Fax: +1 678 584 9259

Technologies Argus
First de Mexico
Anatole France Num. 17
Colonia Polanco
11560, México D.F.
Tel: +52 55 5280 6990

Alpha TEK ooo
Khokhlovskiy Pereulok 16
Stroenie 1, Office 403
Moscow, 109028
Russia
Tel: +7 495 916 1854
Fax: +7 495 916 1349

Alphatec Baltic
S. Konarskio Street 49-201
Vilnius, LT-03123
Lithuania
Tel: +370 5 210 5291
Fax: +370 5 210 5292

Visit us at www.alpha.ca

Power